RAPID EXCHANGE RODS
TO GO WHERE NO SPRING
BRAKE HAS GONE BEFORE

ultralife+™ TSE-REX

TSE ULTRALIFE PLUS REX - RAPID EXCHANGE RODS

All the features of the industry tested UltraLife Plus which include

- New Urethane Coating
- TSE All-N-One™
- Proprietary TSE Sealed When It Counts™
- New Urethane Spring Coating
- Standard 10 year warranty

Plus THE TSE ULTRALIFE PLUS REX CARACTERISTICS

Installation

- Simple work instructions (60% less than competitors)
- Less labor time to install (Testing results confirm up to 75% less time)
- Universal fit means common service base installation
- Less chance to do it wrong (Highest installation failure mode eliminated)

VCT – Variable Clocking Technology

- Less sealing responsibility (Diaphragm comes factory sealed)
- No "clamped" air connection to worry about when setting port locations
- 180° clock rotation eliminates need for stocking both left and right hand units

Reduced inventory with better application coverage

- Two part numbers handle most applications:
- Less parts to buy and store on shelf

Patented design

- U.S. Patent No. 9,050,958
- Patented design eliminates potential failure compared to conventional designs

TSE-REX ULTRALIFE PLUS

TSE-REX UltraLife Plus Part Numbers

3030TVR2ULP : 3030 2.5” Stroke | 3030TVR3ULP : 3030 3” Stroke

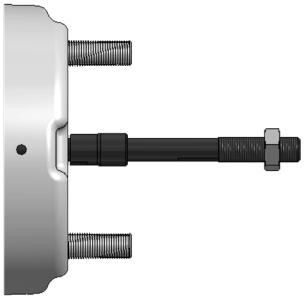

Single Kit Models	Box Color Code	Description	Typical Applications	Works with the following Auto-Slack brands & models*
Push rod kits - Threaded includes jam nut installed				
K575	Gold	5.75" B dimension threaded Rod	Standard 5" trailer axle	All
K631	Silver	6.31" B dimension threaded Rod	SAF axle	
K706	Purple	7.06" B dimension threaded Rod	Meritor large diameter axle	
K975	Green	9.75" B dimension threaded Rod	Intraax/Vantraax	
K150	None	15.0" B dimension threaded Rod	Universal fully threaded	

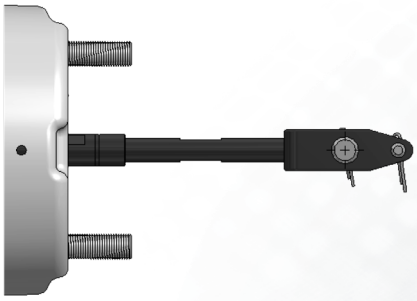

Single Kit Models	Box Color Code	Description	Typical Applications	Works with the following Auto-Slack brands & models*
Push rod kits - Fixed Clevis includes stainless steel pins and cotters installed				
K225-130	None	2.25" A dimension Fixed Clevis with 1.3" pin spacing	Truck welded clevis	1, 3, 4, 6, 8
K680-102	Orange	6.80" A dimension Fixed Clevis with 1.02 pin spacing	Standard 5" Axle Gunite Slack	1, 2
K680-130	Yellow	6.80" A dimension Fixed Clevis with 1.3" pin spacing	Standard 5" Axle	1, 3, 4, 6, 8
K680-138	White	6.80" A dimension Fixed Clevis with 1.38" pin spacing	Standard 5" trailer axle Meritor, Stemco slack	1, 5, 7
K110-130	Brown	11.0" A dimension Fixed Clevis with 1.3" pin spacing	Intraax/Vantraax	1, 3, 4, 6, 8
K110-138	Blue	11.0" A dimension Fixed Clevis with 1.38" pin spacing	Intraax/Vantraax Meritor, Stemco slack	1, 5, 7

*Auto-Slack Notes:
1. TSE/Webb/MEI/Haldex (0.5" pin)
2. Gunite 1000 series 1.02" pin spacing
3. Gunite 2000 series 1.3" pin spacing
4. Meritor 1.3" pin spacing (Truck)
5. Meritor 1.38" pin spacing (Trailer)
6. Stemco 1.3" pin spacing
7. Stemco 1.38" pin spacing
8. Bendix Versajust

OEM names are used for reference purposes only.

2310 Industrial Drive S.W.
Cullman, Alabama 35055

WWW.TSEBRAKES.COM
256 736-6275

©2019 TSE Brakes, Inc.